Halsey Taylor
SPECIFICATIONS

Halsey Taylor Outdoor HydroBoost Bottle Filling Station Bi-Level with Pet Station Non-Filtered Non-Refrigerated

Model 4420BF1LDB

MOUNTING INSTRUCTIONS and PLUMBING CONNECTIONS

Provide solid, well-drained surface to mount pedestal fountain (concrete pad recommended). Mount on a smooth, flat, finished surface with adequate support (300 lb. load minimum). Secure unit with (8) 3/8" minimum fasteners (not included). Refer to rough-in. Should be attached firmly to mounting surface in order to secure unit.

Modified low stream height bubbler for pet fountain.

Locate and install plumbing through ground as required.

NOTE: Unit is not furnished with service valve.

Position pedestal over plumbing and secure base to fasteners. Remove access panels and connect supply and water lines. Turn on water supply and check for leaks. Reassemble access panels to pedestal.

Trap and service stop not included.

OPERATING PRESSURES:
Supply water 20 – 105 psi maximum

TOP VIEW

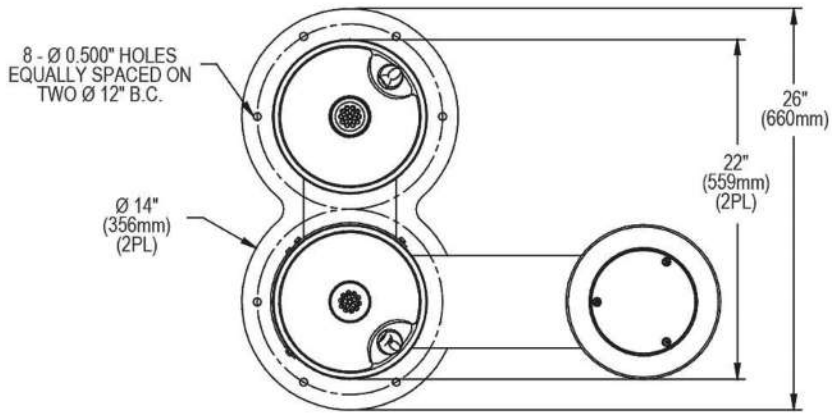

FRONT & SIDE VIEWS

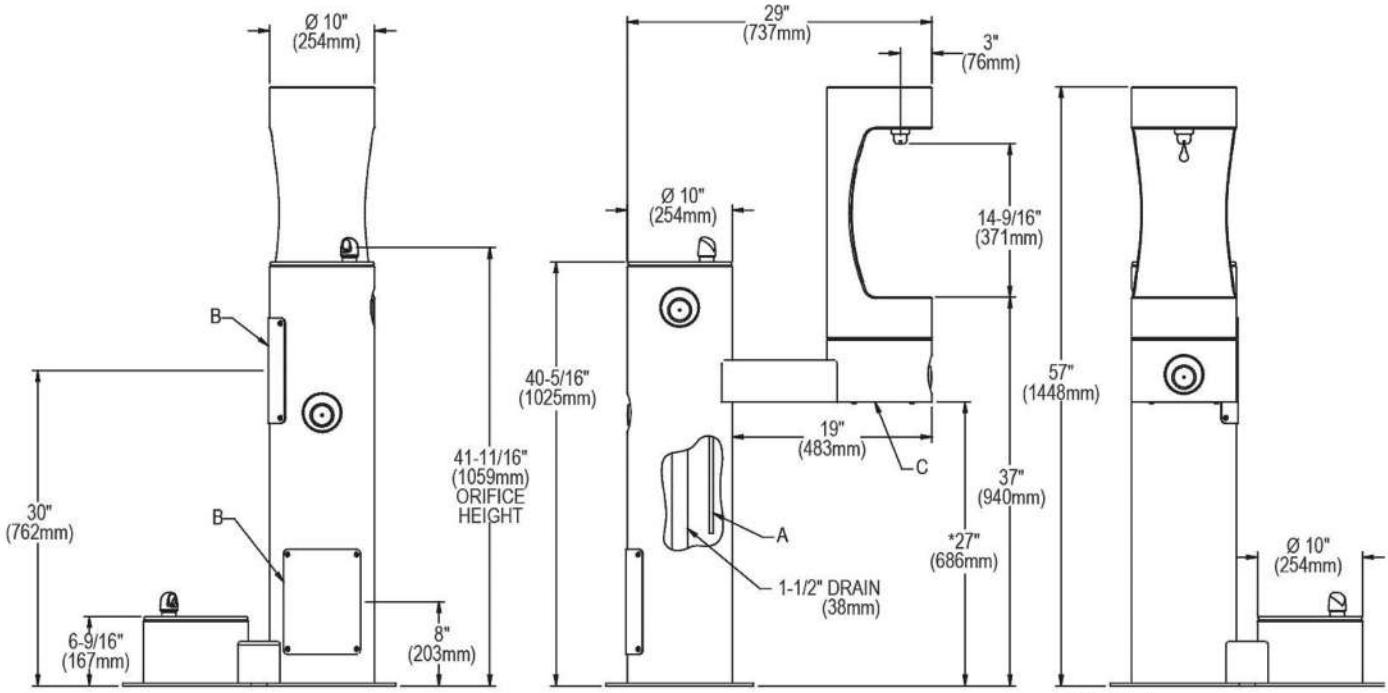

* ADA Requirement

A = 3/8" O.D. Unplated copper tube connect. Shut off valve by others.
B = Access panel(8" x 10").
C = Removable bottom cover.

In keeping with our policy of continuing product improvement, Halsey Taylor reserves the right to change product specifications without notice. Please visit Halseytaylor.com for the most current version of Halsey Taylor product specification sheets. This specification describes a Halsey Taylor product with design, quality, and functional benefits to the user. When making a comparison of other producers' offerings, be certain these features are not overlooked.

2222 Camden Court
Oak Brook, IL 60523

© 2017